Satchwell™

ALMS, ALXS, ALES

SPRING RETURN LINEAR ACTUATORS

Specification no. 487-X-XXX†

Satchwell Linear Actuators type 'AL-S' are power failure return modulating actuators having a linear output, for direct coupling to Satchwell lift and lay seat-type control valves. They are also suitable for other seat valves requiring a linear drive over stroke lengths of up to 25.4mm (1"), within the limits of output thrust stated overleaf, with compatible mounting arrangements and spindle projections.

These actuators are suitable for either two-position or modulating control, dependent on the controller or other switching device providing the input signal. The ALMS is suitable for a mains power supply, the ALXS is 24V, and the ALES is 24V, but accepts a 0-10Vdc input signal.

The ALES actuator can be set to operate a low hysteresis when used for close control applications on microprocessor based controllers such as the Satchwell MicroNet and Satchwell Σ range of controllers.

†For the full specification number replace the 4Xs with the appropriate figures from the 'TYPE' column in the table on Page 2.

Made under United Kingdom patent number 2211274 B and European patent number 0313290. Patents held by TAC Satchwell.

FEATURES

- **Positive power failure operation by mechanical spring - does not rely on any other power source**
- **Patented maintenance free air brake system**
- **Spring return action to 'spindle retracted' or 'spindle extended' position, select from table overleaf**
- **Direct coupling to Satchwell lift and lay seat valves type MZ, MZF, MJF, VZ, VZF and VSF without extra mounting brackets or linkage kits, saving site time**
- **Direct coupling to other makes of lift and lay seat valve, where stroke, thrust, spindle projections and mounting are compatible**
- **Universal for valve strokes, up to 25.4mm (1"). Actuator stroke is self-setting to suit valve stroke, including ALES by simple adjustment**
- **Standard or low hysteresis selection on ALES to cater for different application types**
- **Case sealed to IP 54 as standard**
- **Built-in auxiliary switches operate at each end of the stroke**

Multi-Lingual Instructions
MLI 3.501 - Mounting Instructions
Data Sheets
DS 4.110 - VZ, VSF, VZF
DS 4.610 - MZ, MJF, MZF

t.a.c Satchwell

SPECIFICATIONS

TYPES	ALMS1601	ALMS1651	ALXS1201	ALXS1251	ALES1302	ALES1352
POWER SUPPLY:	230V ±10%, 50/60 Hz		24V ±10%, 50/60 Hz, supplied by a transformer conforming to EN 61558		24V ±10%, 50/60 Hz	
POWER CONSUMPTION:	18VA @ 240V		15VA		18VA	
CLUTCH CONSUMPTION:	9.5VA @ 240V		8VA		8VA	
LIMIT & TRANSFER SWITCH RATING:	5A		0.75A		–	
RUNNING SPEED:	7 s/mm (178 s/in)					
SPRING RETURN SPEED:	0.3 s/mm (8 s/in)					
NO. OF POWER FAILURE OPERATIONS:	5000					
SPRING RETRACTS ACTUATOR SPINDLE:	Yes	No	Yes	No	Yes	No
SPRING EXTENDS ACTUATOR SPINDLE:	No	Yes	No	Yes	No	Yes
MAXIMUM STROKE:	25.4mm (1")					
THRUST:	311N					
AUXILIARY SWITCHES:	Two, 5A, 250V Fixed (Built-in)					
INPUT: CONTROL SIGNAL (for modulation)	Pulsed - 230 Volts		Pulsed - 24 Volt ac		0-10Vdc	
APPLICATION	Two-position control from thermostat, time switch or other switching device having 240V rated change-over contacts. Modulating control from any controller having a 3-wire mains output.		Modulating control from any controller having a pulsed 24V output.		Modulating control from any controller providing a 0-10Vdc positioning signal. Start and Span adjustments, also DA/RA switch included. Refer to 'Operation'.	
ASSOCIATED CONTROLLERS	CSC, SVT, DC1100, DC1400, MN350, MN550		MMC, CXR, CXT, IAC, CSC, URC, MN350, MN450, MN550, MN650		MMC, KMC, DRTE, CZT, BAS, Satchwell Σ, IAC, URC, MN350, MN450, MN550, MN650	
ASSOCIATED VALVES: 2 - Port: See DS 4.410	VZF up to 100mm, VSF & VZ					
3 - Port: See DS 4.610	MZF up to 100mm, MJF & MZ					

Action: Reversing - modulating

Stroke Time: See table on Page 3.

Mounting Attitude: See 'Installation Instructions' on Page 5

Ambient Temperature Limits: Operating: -20 to 50°C
Storage: -40 to 70°C

Max. Ambient Humidity: Operation & Storage: 95% rh non-condensing

CONSTRUCTION

Case:	Moulded plastic housing and removable terminal cover (fire resistant to UL94V-0)
Spring Housing:	Pressure die cast zinc base alloy
Mounting Bracket:	Pressure die cast aluminium
Protection Class:	IP 54
Drive:	Operates on screw-jack principle, driven by a reversible synchronous motor via a gear train.
Motor:	Split phase, capacitor reversing type, continuously rated.
Gear Ratio:	142 : 1
Spring Clutch:	The electro-magnetic clutch is continuously energised.
Return Spring:	Multi-turn, clock type, hardened and tempered steel.
Spindle Coupling:	Freely rotating coupling, screwed, 3/8" -24 UNF, female. Adaptor to ¼" -32 UNEF, female, supplied fitted.
Position Indicator:	Spindle anti-rotation plate moves against stroke scale on mounting bracket. Marked 0 to 10, representing 0 to 100% stroke. Fix appropriate self-adhesive scale to suit valve stroke, see 'Commissioning'.
Limit & Transfer Switches:	ALMS & ALXS: Load dependent switches, self-adjusting to match valve stroke. Control signal transfers from terminal 1 to 1T and 2 to 2T at respective limits of valve stroke (not electrically separate). ALES: Limit switches operate as for other actuators, but are internally connected between electronics card and motor windings. The transfer function is not necessary as multi-stage sequencing is derived from 0-10 Volt output signals from multi-stage controllers.
Electronic Positioner: **(ALES only)**	Built-in printed circuit board connected by plug and socket for easy servicing. Internally connected to 1000 Ohm position feedback potentiometer, driven via gears from output shaft. Separate 0-10Vdc output signal available to monitor position or as a service aid.
Terminals:	Accept 2 x 1.5mm² or 1 x 2.5mm² cable.
Conduit Entries:	Three x 21mm dia. knockouts (detachable plate). (Use only bottom two on ALES.)
Auxiliary Switches:	Two built-in voltage free single pole change-over switches rated at 5A, 250V, built-in fixed operating points at either end of the travel, approximately 1.5mm of actuator stroke before each limit switch.

VALVE STROKE TIME

This table gives total stroke time related to type, size and stroke of valve with type of actuator used.

VALVE TYPE AND SIZE	VALVE STROKE	NOMINAL VALVE STROKE TIME (secs)	
		Motor speed 7 s/mm	Spring speed 0.3 s/mm
VZ & MZ½" & ¾" VSF & MJF15mm	9.5mm (3/8")	67	3
VZ & MZ1"-2" VSF & MJF20, 25mm	15.9mm (5/8")	111	5
VSF & MJF32-50mm VZF & MZF65-100mm	25.4mm (1")	178	8

OPERATION

The stroke of the 'AL-S' Linear Actuator is self-setting, using load-dependent switches, and is determined by the stroke of the valve. The ALES requires only a simple adjustment. Consequently, all specifications of actuator are universal and can be fitted to any lift and lay seat valve having a stroke length within its nominal range, see details under 'Specifications' on Page 2 and 'Valve Stroke Time' on Page 3.

ALMS and ALXS Actuators

The load-dependent switches perform a combined limit and transfer function. The limit switches de-energise the actuator at the end of stroke, whilst the transfer switches are used basically for sequence operation in multi-stage applications. Where additional switching or interlocking functions are required, use the built-in auxiliary switches detailed under 'Specifications'.

When energised between terminals 1 and 3, the actuator moves its spindle towards the fully extended position, to open a Satchwell 2-port or 3-port valve to the heat exchanger.

Conversely, when energised between terminals 2 and 3, the actuator moves its spindle towards the fully retracted position, to close the valve.

The load-dependent limit switches transfer the control signal from terminal 1 to 1T and from terminal 2 to 2T at the respective limits of valve stroke.

ALES Actuators

The ALES incorporates an electronic positioner and provides modulating control from any controller having a 0-10Vdc output. Using the 'START' and 'SPAN' adjustments, the actuator can be set to make a complete stroke over any span from 4 to 10 volts, starting at any point within the signal range, providing the sum of 'START' volts plus 'SPAN' volts does not exceed 10. The load-dependent limit switches operate basically as described for the ALMS and ALXS, but are internally connected between the electronics card and the motor windings.

Where additional switching or interlocking functions are required, use built-in auxiliary switches detailed under 'Specifications'.

A separate 0-10Vdc output is available (terminal 11) for indicating actuator position to a Building Management System or as a Service and Commissioning aid. This signal follows the complete actual stroke of the valve, not the input Voltage.

ALES actuators can be set to operate a low hysteresis when used for close control applications on microprocessor based controllers. The hysteresis is set by using a jumper link on the actuator PCB (see the commissioning section for details). A low hysteresis setting gives 200 steps between 0 and 10Vdc input and the standard setting gives 25 steps.

The following adjustments are made on the electronic printed circuit board, accessible behind the removable front cover.

ADJUSTMENT	MARKED	FUNCTION	Factory set at:
Slide Switch	⊕/⊖	Selects Direct or Reverse Action ⊕ signifies increase of actuator position with increasing input dc Volt signal. ⊖ signifies the reverse of this.	⊕
Potentiometer	START (0-10V)	Sets the command signal Voltage at which the actuator commences to move from zero position.	0V
Potentiometer	SPAN (4-10V)	Sets the change in command signal Voltage which will cause actuator to move through complete stroke to position 10.	10V
Potentiometer	STROKE	Matches operation of actuator to desired valve stroke.	16mm

ALE ACTUATOR POSITION FOR TYPICAL SETTINGS OF 'START', 'SPAN' AND 'ACTION'

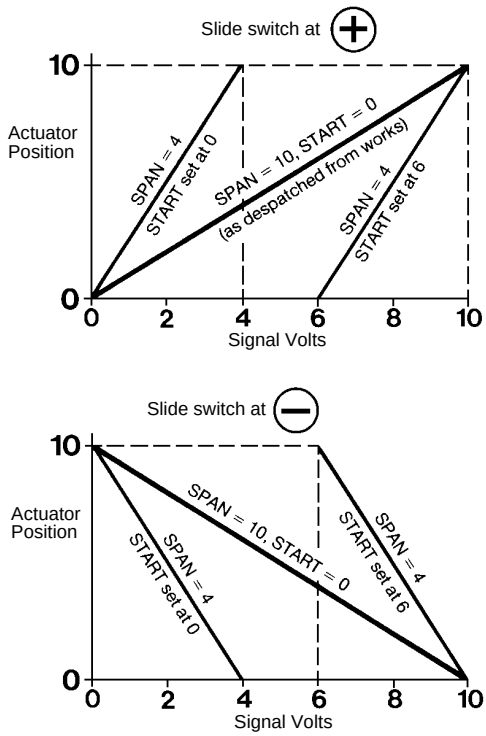

Fig.1

MAINTENANCE

The spring power failure operation must be regularly checked by a competent person and can normally be carried out as part of the regular maintenance schedule. The spring checks are detailed below. Depending on site operation, this check should be carried out every 6 months minimum. If the checks are only every 6 months then one of them should be carried out at the start of the heating season.

CHECKING POWER FAILURE OPERATION

Remove all power from the actuator and check for correct spring operation.

WARNING: HANDS SHOULD BE KEPT AWAY FROM THE ACTUATOR DURING THIS OPERATION.

INSTALLATION

WARNINGS -

STEAM OR HOT WATER HAZARD. BEFORE REMOVING ACTUATOR FROM VALVE OR OPENING VALVE, ENSURE THAT THE VALVE CONTROL MEDIUM IS ISOLATED AND RELIEVE THE PRESSURE. WORK SHOULD ONLY BE CARRIED OUT BY A COMPETENT ENGINEER.

THESE ACTUATORS ARE CONTROLS APPLICATION ACTUATORS, NOT SAFETY DEVICES. FOR SAFETY CRITICAL APPLICATIONS A SECONDARY SAFETY DEVICE MUST BE INSTALLED.

WHEN OPERATING A VALVE HANDLING FLUID ABOVE 100°C, DO NOT MOUNT ACTUATOR ABOVE VALVE, BUT TO ONE SIDE.

THIS IS A SPRING RETURN ACTUATOR. KEEP CLEAR OF ALL MOVING PARTS WHEN REMOVING POWER.

Cautions

Do not apply power unless the actuator is fitted to a valve.

Do not apply any voltages until a qualified technician has checked the system and the commissioning procedures have been completed. See Page 6.

Steam Applications: Following a shutdown of the steam system it is important that the control valve is fully open before introducing steam into the pipeline (purging) or damage may occur to the actuator spindle or valve plug.

Ambient temperature must be within limits -20 to 50°C

Do not install valve with actuator directly underneath it.

Allow sufficient clearance for fitting and wiring, a minimum of 120mm between the top of the actuator and the nearest obstruction.

Complete mechanical fitting of actuator to valve BEFORE connecting electrical wiring. This avoids damage which may occur, due to load-dependent limit switches not being operated.

Ensure location is reasonably clean and dry.

ACTUATOR FITTING INSTRUCTIONS

Caution: do not remove despatch bolts 'G' until instructed to do so in the commissioning section on Page 6.

1. Fit locknut 'B', (supplied) to the valve spindle (for certain older valves this will be supplied fitted (as locknut 'F')).
2. Unscrew adaptor 'A' from the coupling nut 'E' and screw it (with locknut 'F' attached) to the valve spindle (at least five full turns).

   Note: For certain valves, adaptor 'A' will already be fitted to the valve spindle, and some older valves will have a long 3/8" spindle. In these cases, unscrew adaptor 'A' with its locknut 'F' from the coupling nut 'E' and discard it.

   Note: The procedure hereafter for fitting an actuator to an older valve with a long 3/8" spindle is the same as for other valves, except that where 'adaptor 'A'' is written, read 'the spindle'.
3. To fit a direct acting actuator, continue from Step 4. To fit a reverse acting actuator, continue from Step 11.

Note: Steps 4. to 10. apply to direct acting actuators only.

4. Unscrew lugnut 'C' from the valve bonnet. Place the actuator mounting frame over the valve bonnet and screw lugnut 'C' (lugs uppermost) to the valve bonnet and tighten.
5. Pull the valve spindle up to the fully extended position.

WARNING - ALMS ACTUATORS ARE AT MAINS POTENTIAL. AUXILIARY SWITCHES ON ANY MODEL MAY BE AT MAINS POTENTIAL. OBSERVE LOCAL WIRING REGULATIONS, EARTHING REQUIREMENTS AND ALL USUAL SAFETY PRECAUTIONS.

6. Connect the actuator power supply wiring and control signal wiring as described in the Wiring section (Page 6).
7. Switch on the power supply and apply the control signal to drive the actuator coupling nut 'E' downwards, then engage the thread of adaptor 'A' into coupling nut 'E' by hand rotation (at least five full turns of coupling nut 'E').
8. Apply a control signal to drive the coupling nut downwards until the valve is fully open; check that the anti-rotation plate does not travel beyond the despatch bolt holes and that a 3mm gap (minimum) exists between locknut 'B' and the valve bonnet (Fig.3).
9. Apply a control signal to drive the coupling nut upwards until the valve is fully closed; check that the anti-rotation plate does not travel beyond the despatch bolt holes and that a 6mm gap (minimum) exists between the top of the anti-rotation plate and the main body of the actuator (Fig.3).
10. If necessary, adjust the position of adaptor 'A' and repeat Steps 8. and 9. to achieve the limits stated. Tighten locknuts 'B' (if applicable) and 'F'.

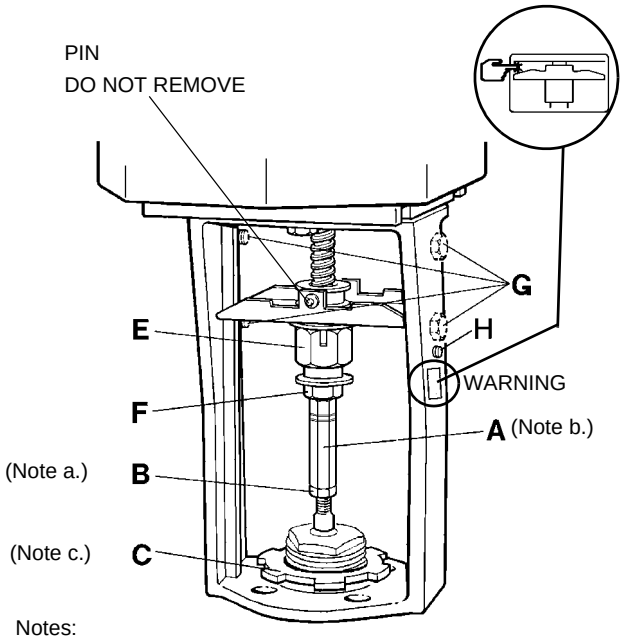

Notes:

a. Locknut 'B' is supplied tied to the actuator mounting frame. Transfer to valves fitted with a 1/4" threaded spindle before fitting actuator.

b. Adaptor 'A' is supplied screwed into the coupling nut 'E'. Transfer to valves fitted with a 1/4" threaded spindle before fitting actuator.

c. Lugnut 'C' should be fitted with its collar down and lugs on top (all valves).

Fig.2

Note: Steps 11. to 17. apply to reverse acting actuators only. Follow Steps 1. to 5. first.

11. Unscrew lugnut 'C' from the valve bonnet. Place the actuator mounting frame over the valve bonnet followed by lugnut 'C' (lugs uppermost). DO NOT ENGAGE LUGNUT WITH BONNET THREAD.
12. Push the valve spindle down to the fully retracted position.
13. Engage the thread of adaptor 'A' (with locknut 'F' attached) into coupling nut 'E' by hand rotation (at least five full turns of coupling nut 'E').
14. Adjust adaptor 'A' until the actuator mounting frame just rests on the bonnet clamping surface. Screw lugnut 'C' (lugs uppermost) to the valve bonnet and tighten.
15. Apply a control signal to drive the coupling nut downwards until the valve is fully open; check that the anti-rotation plate does not travel beyond the despatch bolt holes and that a 3mm gap (minimum) exists between locknut 'B' and the valve bonnet (Fig.3).
16. Apply a control signal to drive the coupling nut upwards until the valve is fully closed; check that the anti-rotation plate does not travel beyond the despatch bolt holes and that a 6mm gap (minimum) exists between the top of the anti-rotation plate and the main body of the actuator (Fig.3).
17. If necessary, adjust the position of adaptor 'A' and repeat Steps 15. and 16. to achieve the limits stated. Tighten locknuts 'B' (if applicable) and 'F'.

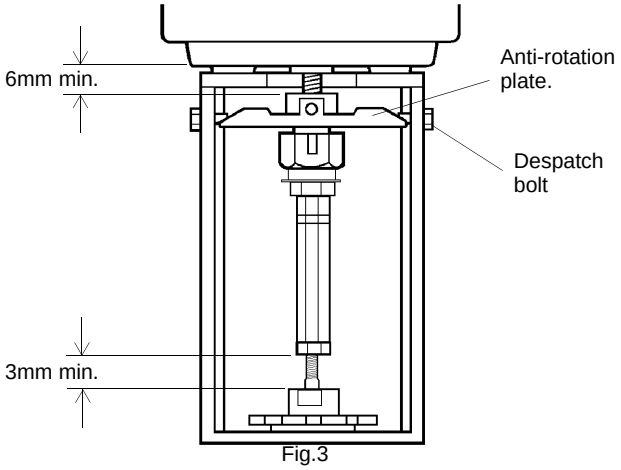

Fig.3

WIRING

WARNING - ALMS ACTUATORS ARE AT MAINS POTENTIAL. AUXILIARY SWITCHES ON ANY MODEL MAY BE AT MAINS POTENTIAL. OBSERVE LOCAL WIRING REGULATIONS, EARTHING REQUIREMENTS AND ALL USUAL SAFETY PRECAUTIONS.

Remove cover 'A' and conduit plate 'B'. Fit flexible conduit to plate, allowing sufficient length to permit removal of the actuator.

18. Connect cables in accordance with the system wiring diagram or refer to diagram inside cover in conjunction with controller diagram. Earth actuator, where applicable, using the top (ALMS, ALXS) or bottom (ALES) terminal screw. Observe 'Wiring Precautions' below. Keep wiring clear of internal moving parts.
19. Replace conduit plate and cover.

Caution

Do not switch on power supply until commissioning checks 1 to 4 have been completed.

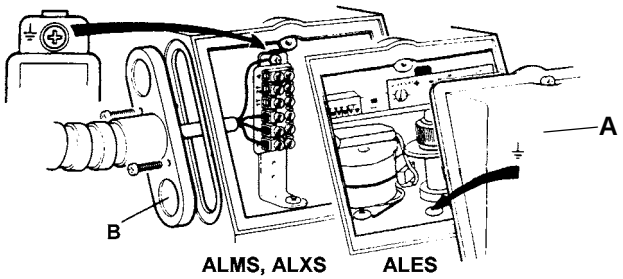

Fig.4

COMMISSIONING

ALL SPECIFICATIONS: Whilst checking actuator travel over full valve stroke as detailed below, a visual check should be made to ensure that coupling-up to the valve is correct. The coupling anti-rotation plate must not be seen to over-lap the despatch bolt holes (G) by more than 1mm at either end of the stroke (Fig.5). If this is not correct, replace the despatch bolts (G), power fail, and repeat the appropriate fitting instructions given under 'Installation' on Page 5.

ALMS and ALXS Actuators

BEFORE SWITCHING ON POWER SUPPLY:

1. Check that all control equipment is correctly located and fitted.
2. Check ambient temperature conditions.
3. Check that actuator has been correctly assembled to valve, up to the stage when electrical power is called for.
4. Remove terminal cover and check that all control circuit wiring is correct and in accordance with the overall control system wiring diagram. Check that the electrical supply voltage is correct.

Caution

Wiring errors not only cause malfunctions; they may also damage controllers and/or actuators.

5. Replace terminal cover.
6. Now switch on power supply.
7. **For ALMS1601 and ALXS1201 actuators**, drive the actuator so that the spindle is fully extended. Remove despatch bolts 'G' (Fig.6).

For ALMS1651 and ALXS1251 actuators, drive the actuator so that the spindle is fully retracted. Remove despatch bolts 'G'. DO NOT REMOVE STOP BOLTS 'H' (Fig.7).

Note: bolts 'G' should be retained for re-use, if the actuator needs to be removed for valve maintenance, by wiring them to the bottom of the actuator frame.

8. Check that the actuator functions correctly by operating the controlling switch or adjusting the controller set value above and below the temperature (or humidity) currently existing at the sensor (or simulated). This must be within the scale limits.

   Note: If the actuator forms part of a multi-stage system in which several actuators operate in sequence, wait until the appropriate stage is reached.
9. Whilst checking actuator travel over full stroke of valve, run actuator to fully retracted position. Select self-adhesive indication scale to match valve stroke, from set of three scales provided. Fix scale along outside edge of actuator mounting bracket, in position where it will be most clearly visible, lining up underside of anti-rotation plate on actuator spindle with position '0' on scale (Fig.5).
10. Remove all power from the actuator and check for correct spring operation.

WARNING - HANDS SHOULD BE KEPT AWAY FROM THE ACTUATOR DURING THIS OPERATION.

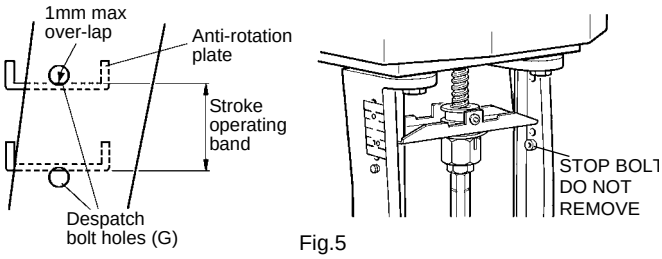

Fig.5

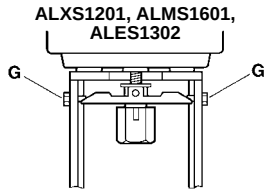

Fig.6

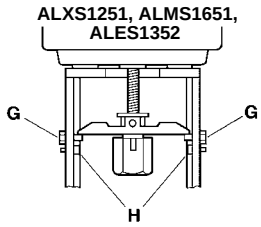

Fig.7

ALMS, ALXS WIRING PRECAUTIONS

Wiring from actuator to controller[a]:	Max. length of 1.5mm² cable unscreened	Max. resistance per conductor
24V/240V~ Supply	100m	5Ω

a When wiring to BAS outstations refer to the appropriate outstation data sheet for the wiring precautions.

Note: For longer lengths, increase cable and observe max. resistance. Screen feedback wiring, or use MICC or run in a separate conduit, when applicable.

WARNING - ALMS ACTUATORS ARE AT MAINS POTENTIAL. AUXILIARY SWITCHES ON ANY MODEL MAY BE AT MAINS POTENTIAL. OBSERVE LOCAL WIRING REGULATIONS, EARTHING REQUIREMENTS AND ALL USUAL SAFETY PRECAUTIONS.

Caution

Do not connect ALMS or ALXS actuators in parallel.

ALL SPECIFICATIONS: Whilst checking actuator travel over full valve stroke as detailed below, a visual check should be made to ensure that coupling-up to the valve is correct. The coupling anti-rotation plate must not be seen to over-lap the despatch bolt holes (G) by more than 1mm at either end of the stroke (Fig.5). If this is not correct, replace the despatch bolts (G), power fail, and repeat the appropriate fitting instructions given under 'Installation' on Page 5.

ALES1302 Actuator

BEFORE SWITCHING ON POWER SUPPLY:

1. Check that all control equipment is correctly located and fitted.
2. Check ambient temperature conditions.
3. Check that the actuator has been correctly assembled to the valve, up to the stage when electrical power is called for.
4. Remove terminal cover and check that all control circuit wiring is correct and in accordance with the overall control system wiring diagram. Check that the electrical supply voltage is correct.

Caution

Wiring errors not only cause malfunctions; they may also damage controllers and/or actuators.

Setting the Actuator

Note: The following instructions MUST be followed to initially set the actuator stroke to match the valve stroke and each time the actuator is transferred to a different valve.

Set all adjustments as follows:

Adjustment	**Setting**
START 'C'	10
SPAN 'D'	10
STROKE 'A'	max. (fully clockwise)
DA/RA SWITCH 'B'	+ (DA)
HYSTERESIS JUMPER 'G'	A-B or B-C

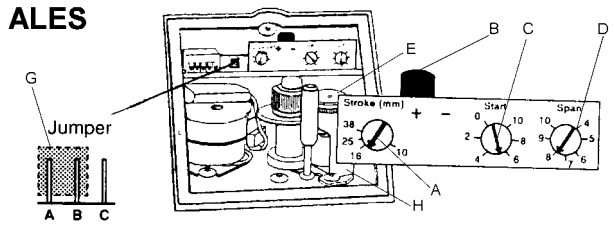

Fig.8

1. Now switch on the 24V power supply.
2. Set switch 'B' to - (RA), this will drive the actuator so that the actuator drive screw is fully extended (position 10). Wait until the drive screw has stopped moving before continuing.
3. See Fig.6. Remove despatch bolts 'G'.
4. Remove the 24V power supply; the spring will return the actuator drive screw to it's fully retracted (position 0). Wait until the drive screw has stopped moving before continuing.
5. See Fig.8. Loosen the pot fixing screw 'H'. By sliding the pot assembly towards you, disengage gear 'E' from the main drive shaft. Turn the pot gear 'E' by hand in the anti-clockwise direction (when viewed from above) until the end stop is reached. Gently slide the pot assembly back into position so that the pot gear 'E' engages with the main drive shaft. Do not apply too much force in meshing the gears as over pressure will result in reduced life. Re-tighten the location fixing screw 'H'.
6. Set switch 'B' to the +(DA) position and Reinstate the 24V supply.
7. Check that the voltage between terminals 7 and 11 is 0.1V ±100mV.
8. Adjust the controller set value to give a 10Vdc output.
9. Check the voltage between terminal 7 and 9 is approximately 10Vdc.
10. Change the 'Start' setting from '10' to '0'. The actuator drive screw will now run until it is fully extended (position 10) and operate its limit switch. Wait until the drive screw has stopped moving before continuing.
11. Adjust the 'STROKE' setting in an anti-clockwise direction until the voltage measured between terminal 7 and 11 is 9.9V ±100mV.
12. Select and fix the appropriate self-adhesive stroke indication label to the actuator bracket. The relevant stroke length can be found on the appropriate Satchwell data sheet for the valve being used.
13. Re-set 'START', 'SPAN' and 'DA/RA' adjustments as required, to suit control system. DO NOT alter 'STROKE' setting.

Re-check operation by adjusting controller set value so that actuator runs to position '0'. If limit switch does not operate, adjust 'START' setting very slightly anti-clockwise for 'DA' switch mode (clockwise for 'RA' switch mode) until limit switch does operate.

Now adjust controller set value so that actuator runs to position '10'. If limit switch does not operate, adjust 'STROKE' setting very slightly clockwise (applicable to both 'DA' and 'RA' switch modes) until limit switch operates.

Re-adjust controller set value as required, to suit control system.

14. Set the required hysteresis for the actuator using jumper 'G'. Low hysteresis (200 steps) is used for close control applications using microprocessor based controllers and standard hysteresis (25 steps) is used to analogue controllers and standard applications. See the table below for details:

	Jumper 'G' set to A - B 200 Steps	**Jumper 'G' set to B - C 25 Steps**
	10Vdc 0Vdc	10Vdc 0Vdc
MMC, KMC, IAC, MN, BAS, Σ, URC	**Yes**	**Yes**
DRTE, CZT	**No**	**Yes**

15. Replace terminal cover.
16. Remove power from actuator and check for correct spring operation.

WARNING - HANDS SHOULD BE KEPT AWAY FROM THE ACTUATOR DURING THIS OPERATION.

ALES WIRING PRECAUTIONS

Wiring from actuator to controller:	**Max. length of 1.5mm² cable unscreened**	**Max. resistance per conductor**
24V~ supply	100m	5Ω
0-10Vdc signal	100m	50Ω

For longer lengths of 24 Volt supply wiring, increase cable size and observe maximum resistance, also run separate return from terminal 7, as Fig.13.

Terminals 7 and 10 are both at ground potential, provided for convenience of wiring.

Where screening is required, use either screened cable or run cables in a separate conduit.

WARNING - IF AUXILIARY SWITCHES ARE USED AT MAINS POTENTIAL, OBSERVE LOCAL WIRING REGULATIONS, EARTHING REQUIREMENTS AND ALL USUAL SAFETY PRECAUTIONS.

ALL SPECIFICATIONS: Whilst checking actuator travel over full valve stroke as detailed below, a visual check should be made to ensure that coupling-up to the valve is correct. The coupling anti-rotation plate must not be seen to over-lap the despatch bolt holes (G) by more than 1mm at either end of the stroke (Fig.5). If this is not correct, replace the despatch bolts (G), power fail, and repeat the appropriate fitting instructions given under 'Installation' on Page 5.

ALES1352 Actuator

BEFORE SWITCHING ON POWER SUPPLY:

1. Check that all control equipment is correctly located and fitted.
2. Check ambient temperature conditions.
3. Check that actuator has been correctly assembled to valve, up to the stage when electrical power is called for.
4. Remove terminal cover and check that all control circuit wiring is correct and in accordance with the overall control system wiring diagram. Check that the electrical supply voltage is correct.

   Note: Wiring errors not only cause malfunctions; they may also damage controllers and/or actuators.

Setting the Actuator

Note: The following instructions MUST be followed to initially set the actuator stroke and each time the actuator is transferred to a different valve.

Set all adjustments as follows:

Adjustment	**Setting**
START 'C'	10
SPAN 'D'	10
STROKE 'A'	max. (fully clockwise)
DA/RA SWITCH 'B'	+ (DA)
HYSTERESIS	
JUMPER 'G'	A-B or B-C

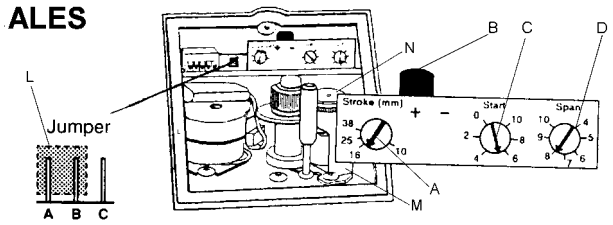

Fig.9

1. Now switch on the 24V power supply. This will drive the actuator so that the actuator drive screw is fully retracted (position 0). Wait until the drive screw has stopped moving before continuing.
2. See Fig.6. Remove despatch bolts 'G'. DO NOT REMOVE STOP BOLTS 'H'.
3. See Fig.9. Loosen the pot fixing screw 'M'. By sliding the pot assembly towards you, disengage gear 'N' from the main drive shaft. Turn the pot gear 'N' by hand in the anti-clockwise direction (when viewed from above) until the end stop is reached. Gently slide the pot assembly back into position so that the pot gear 'N' engages with the main drive shaft. Do not apply too much force in meshing the gears as over pressure will result in reduced life. Re-tighten the location fixing screw 'M'.
4. Check the voltage between terminals 7 and 11 is 0.1V ±100mV.
5. Adjust the controller set value to give a 10Vdc output.
6. Check the voltage between terminal 7 and 9 is approximately 10Vdc.
7. Change the 'Start' setting from '10' to '0'. The actuator drive screw will now run until it is fully extended (position 10) and then operate its limit switch. Wait until the drive screw has stopped moving before continuing.
8. Adjust the 'STROKE' setting in an anti-clockwise direction until the voltage measured between terminal 7 and 11 is 9.9Vdc ±100mV.
9. Select and fix the appropriate self-adhesive stroke indication label to the actuator bracket. The relevant stroke length can be found on the appropriate Satchwell data sheet for the valve being used.
10. Re-set 'START', 'SPAN' and 'DA/RA' adjustments as required, to suit control system. DO NOT alter 'STROKE' setting.

Re-check operation by adjusting controller set value so that actuator runs to position '0'. If limit switch does not operate, adjust 'START' setting very slightly anti-clockwise for 'DA' switch mode (clockwise for 'RA' switch mode) until limit switch does operate.

Now adjust controller set value so that actuator runs to position '10'. If limit switch does not operate, adjust 'STROKE' setting very slightly clockwise (applicable to both 'DA' and 'RA' switch modes) until limit switch does operate.

Re-adjust controller set value as required, to suit control system.

11. Set the required hysteresis for the actuator using jumper 'L'. Low hysteresis (200 steps) is used for close control applications using microprocessor based controllers and standard hysteresis (25 steps) is used to analogue controllers and standard applications. See the table below for details:

	Jumper 'G' set to A - B 200 Steps 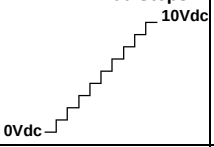	**Jumper 'G' set to B - C 25 Steps** 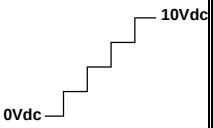
MMC, KMC, IAC, MN, BAS, Σ, URC	**Yes**	**Yes**
DRTE, CZT	**No**	**Yes**

12. Replace terminal cover.
13. Remove power from actuator and check for correct spring operation.

WARNING - HANDS SHOULD BE KEPT AWAY FROM THE ACTUATOR DURING THIS OPERATION.

ALES WIRING PRECAUTIONS

Wiring from actuator to controller*:	**Max. length of 1.5mm² cable unscreened**	**Max. resistance per conductor**
24V~ supply	100m	5Ω
0-10Vdc signal	100m	50Ω

For longer lengths of 24 Volt supply wiring, increase cable size and observe maximum resistance, also run separate return from terminal 7, as Fig.13.

Terminals 7 and 10 are both at ground potential, provided for convenience of wiring.

Where screening is required, use either screened cable or run cables in a separate conduit.

WARNING - IF AUXILIARY SWITCHES ARE USED AT MAINS POTENTIAL, OBSERVE LOCAL WIRING REGULATIONS, EARTHING REQUIREMENTS AND ALL USUAL SAFETY PRECAUTIONS.

CONNECTION DIAGRAMS

BASIC DIAGRAM FOR ALMS MAINS ACTUATORS Fig.10

Signal on 1 drives towards '10'
Signal on 2 drives towards '0'

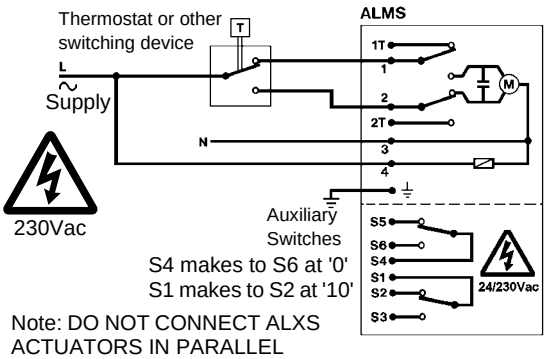

Note: DO NOT CONNECT ALXS ACTUATORS IN PARALLEL

WARNING - AUXILIARY SWITCHES MAY BE AT MAINS POTENTIAL. MAINS VOLTAGE ISOLATORS MUST CONFORM TO

BASIC DIAGRAM FOR ALXS 24 VOLT ACTUATORS Fig.11

Signal on 1 drives towards '10'
Signal on 2 drives towards '0'

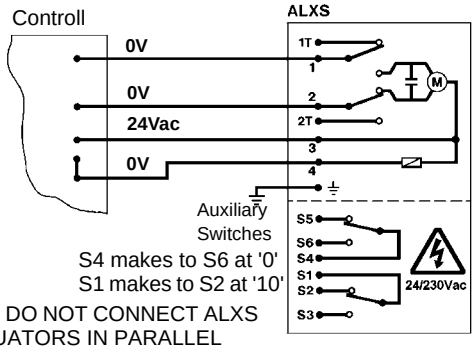

Note: DO NOT CONNECT ALXS ACTUATORS IN PARALLEL

WARNING - AUXILIARY SWITCHES MAY BE AT MAINS POTENTIAL. MAINS VOLTAGE ISOLATORS MUST CONFORM TO EN 60335-1. 24Vac DEVICES MUST BE SUPPLIED BY A TRANSFORMER CONFORMING TO EN 61558.

BASIC DIAGRAM FOR ALES ACTUATORS Fig.12

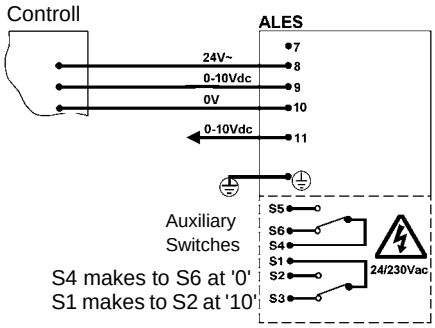

WARNING - AUXILIARY SWITCHES MAY BE AT MAINS POTENTIAL. MAINS VOLTAGE ISOLATORS MUST CONFORM TO EN 60335-1. 24Vac DEVICES MUST BE SUPPLIED BY A TRANSFORMER CONFORMING TO EN 61558.

SEPARATE 24 VOLT POWER SUPPLY TO ALES Fig.13

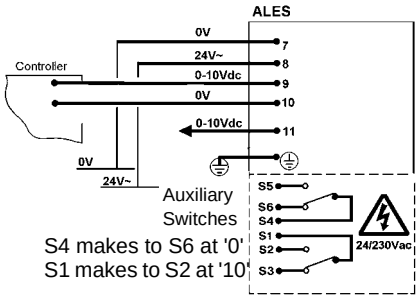

WARNING - AUXILIARY SWITCHES MAY BE AT MAINS POTENTIAL. MAINS VOLTAGE ISOLATORS MUST CONFORM TO EN 60335-1. 24Vac DEVICES MUST BE SUPPLIED BY A TRANSFORMER CONFORMING TO EN 61558.

TWO-STAGE SEQUENTIAL OPERATION Fig.14
from one 0-10 Volt command signal incorporating dead zone

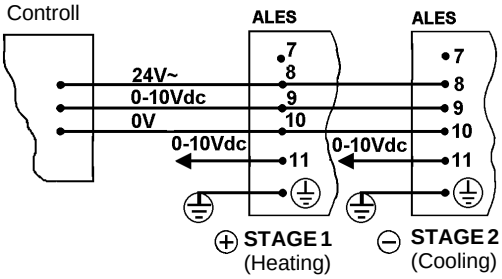

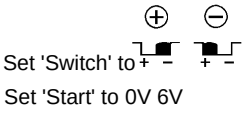

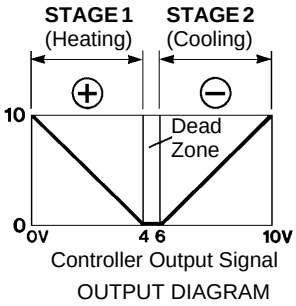

DIMENSIONS

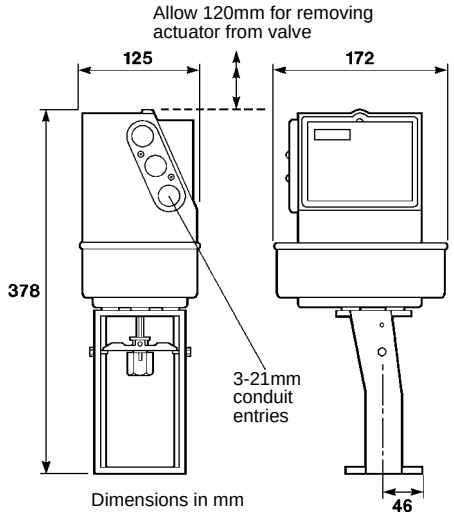

Dimensions in mm

Weight: 4.5 Kg approx. (ALXS, ALMS)
5.0 Kg approx. (ALES)

WARNINGS -

STEAM OR HOT WATER HAZARD. BEFORE REMOVING ACTUATOR FROM VALVE OR OPENING VALVE, ENSURE THAT THE VALVE CONTROL MEDIUM IS ISOLATED AND RELIEVE THE PRESSURE. WORK SHOULD ONLY BE CARRIED OUT BY A COMPETENT ENGINEER.

ALMS ACTUATORS ARE AT MAINS POTENTIAL. AUXILIARY SWITCHES ON ANY MODEL MAY BE AT MAINS POTENTIAL. OBSERVE LOCAL WIRING REGULATIONS, EARTHING REQUIREMENTS AND ALL USUAL SAFETY PRECAUTIONS.

THIS IS A SPRING RETURN ACTUATOR. KEEP CLEAR OF ALL MOVING PARTS AT ALL TIMES.

24Vac DEVICES MUST BE SUPPLIED BY A TRANSFORMER CONFORMING TO EN 61558.

MAINS VOLTAGE ISOLATORS MUST CONFORM TO EN 60335-1.

THESE ACTUATORS ARE CONTROLS APPLICATION ACTUATORS, NOT SAFETY DEVICES. FOR SAFETY CRITICAL APPLICATIONS A SECONDARY SAFETY DEVICE MUST BE INSTALLED.

Cautions

- **Do not apply any voltages until a qualified technician has checked the system and the commissioning procedures have been completed.**
- **If any equipment covers have to be removed during the installation of this equipment, ensure that they are refitted after installation to comply with UL and CE safety requirements.**
- **Observe installation instructions on Page 5.**
- **Observe wiring precautions on Page 6.**
- **Do not apply power unless the actuator is fitted to a valve.**
- **Ensure wires are not inadvertently crossed over. Wiring errors not only cause malfunctions; they may also damage controllers and/or actuators.**
- **Carry out regular checks on the spring power failure operation as detailed on Page 4 under Maintenance.**
- **Steam Applications: Following a shutdown of the steam system it is important that the control valve is fully open before introducing steam into the pipeline (purging) or damage may occur to the actuator spindle or valve plug.**
- **Observe maximum and minimum ambient temperatures.**
- **Check thrust requirements and maximum differential pressure of valve to be driven. Do not exceed rated output thrust.**
- **Interference with those parts under sealed covers renders the guarantee void.**
- **Design and performance of TAC Satchwell equipment is subject to improvement and therefore liable to alteration without notice.**
- **Information is given for guidance only and TAC Satchwell does not accept responsibility for the selection or installation of its products unless information has been given by the Company in writing relating to a specific application.**
- **A periodic system and tuning check of the control system is recommended. Please contact your local sales office for details.**

DS 3.501 12/05

TAC Headquarters
Malmö, Sweden
+46 40 38 68 50

Satchwell Helpline
+44 (0) 1753 611000
satchwell.info@uk.tac.com

a company of Schneider Electric

www.tac.com

t.a.c Satchwell